ESR-2605

Used for Florida State Wide Product Approval

FL10861

Products on this Report which are approved:

Product	FL#
GBC	10861.1
TBE4	10861.2
TBE4Z	10861.2
TBE6	10861.2
TBE6Z	10861.2
TC26	10861.3
TC28	10861.3
TSB2-24	10861.4
VTC2	10861.5

SIMPSON Strong-Tie®

SIMPSON STRONG-TIE COMPANY, INC

ICC Evaluation Service, Inc.
www.icc-es.org

Business/Regional Office ■ 5360 Workman Mill Road, Whittier, California 90601 ■ (562) 699-0543
Regional Office ■ 900 Montclair Road, Suite A, Birmingham, Alabama 35213 ■ (205) 599-9800
Regional Office ■ 4051 West Flossmoor Road, Country Club Hills, Illinois 60478 ■ (708) 799-2305

DIVISION: 06—WOOD AND PLASTICS
Section: 06090—Wood and Plastics Fastenings

REPORT HOLDER:

SIMPSON STRONG-TIE COMPANY, INC.
5959 WEST LAS POSITAS BOULEVARD
PLEASANTON, CALIFORNIA 94588
(800) 925-5099
www.strongtie.com

EVALUATION SUBJECT:

SIMPSON STRONG-TIE CONNECTORS FOR METAL PLATE CONNECTED WOOD TRUSS CONSTRUCTION

1.0 EVALUATION SCOPE

Compliance with the following codes:

- 2006 *International Building Code*® (IBC)
- 2006 *International Residential Code*® (IRC)
- Other Codes (see Section 8.0)

Properties evaluated:

Structural

2.0 USES

Simpson Strong-Tie connectors for metal plate connected wood truss construction are used as wood framing connectors in accordance with Sections 2303.4 and 2304.9.3 of the IBC. The products may also be used in structures regulated under the IRC when an engineered design is submitted in accordance with Sections R301.1.3, R502.11, and R802.10 of the IRC.

3.0 DESCRIPTION

3.1 General:

The connectors described in this report connect wood framing members in metal plate connected wood truss floor or roof construction.

3.1.1 GBC Gable Brace Connectors: The GBC connects wood framed wall top plates to wood roof members to transfer out-of-plane loads on gable end walls. The product is formed from No. 16 gage galvanized steel. See Table 1 for required fasteners and allowable lateral loads perpendicular to the wall plate. See Figure 1 for drawings of the GBC connector showing product dimensions, and typical installations.

3.1.2 TSB Truss Spacer Bracer: The TSB connectors are used as permanent truss bracing that provides lateral support to trusses when installed at right angles to the plane of the truss members. The TSB is formed from No. 22 gage galvanized steel. See Table 2 for the model number, required fasteners, TSB connector length, and allowable tension and compression loads. See Figure 2 for drawings of the TSB truss spacer bracer and a typical installation.

3.1.3 VTC2 Valley Truss Connector: The VTC2 valley truss connector is a valley truss to common truss connector. It is installed over sloped wood-based structural-use roof sheathing and nailed through the sheathing into the top chords of each common roof truss below specified by the design professional. The VTC2 is formed from No. 18 gage galvanized steel. See Table 3 for the product model number dimensions, required fasteners and allowable loads. See Figure 3 for drawings of the VTC connector showing overall dimensions, and typical installation details.

3.1.4 TC Truss Connector: The TC connects wood trusses to wood top plates of wood framed walls or masonry or concrete walls. The TC connectors have horizontal slotted nail holes to allow for horizontal movement between the two members. The TC connector is formed from No. 16 gage galvanized steel. See Table 4 for model numbers, required fasteners, and allowable loads. See Figure 4 for drawings of the TC26 truss clip and an optional TC26 installation for grouted concrete block using a wood top plate nailer.

3.1.5 TBE Truss Bearing Enhancer: The TBE truss bearing enhancer transfers gravity loads from the truss to wood wall double top plate and provides uplift capacity. The product is formed from No. 18 gage galvanized steel. See Table 5 for the model numbers, required fasteners, and allowable loads. See Figure 5 for drawings of the TBE4 connector showing overall dimensions and a typical installation detail.

3.2 Materials:

3.2.1 Steel: The connectors described in this report are manufactured from galvanized sheet steel complying with ASTM A 653, SS designation, Grade 33, with a minimum yield strength, F_y, of 33,000 psi (227 MPa) and a minimum tensile strength, F_u, of 45,000 psi (310 MPa). Base metal thicknesses for the connectors in this report are as follows:

NOMINAL THICKNESS (Gage)	MINIMUM BASE METAL THICKNESS (inches)
No. 16	0.0555
No. 18	0.0445
No. 22	0.0275

For **SI:** 1 inch = 25.4 mm.

The connectors have a minimum G90 zinc coating specification in accordance with ASTM A653. Some models (designated with a model number ending with Z) are available with a G185 zinc coating specification in accordance with ASTM A 653. Some models (designated with a model number ending with HDG) are available with a hot-dip galvanization, also known as "batch" galvanization, in accordance with ASTM A 123, with a minimum specified coating weight of 2.0 ounces of zinc per square foot of surface area (610 g/m^2), total for both sides. Model numbers in this report do not

include the Z or HDG ending, but the information shown applies. The lumber treater and the holder of this report (Simpson Strong-Tie Company) should be contacted for recommendations on the appropriate coating or material to specify for use of the steel connectors in contact with the specific proprietary preservative treated or fire retardant treated lumber.

3.2.2 Wood: Wood members with which the connectors are used must be either sawn lumber or engineered lumber having a minimum specific gravity of 0.50 (minimum equivalent specific gravity of 0.50 for engineered lumber), and having a maximum moisture content of 19 percent (16 percent for engineered lumber) except as noted in Section 4.1. The thickness of the supporting wood main member must be equal to or greater than the length of the fasteners specified in the tables in this report, or as required by wood member design, whichever is greater. For installation in engineered wood members, minimum allowable nail spacing and end and edge distances, as specified in the applicable evaluation report for the engineered wood product, must be met.

3.2.3 Fasteners: Nails used with connectors described in this report must comply with the material requirements, physical properties, tolerances, workmanship, protective coating and finishes, certification, and packaging and package marking requirements specified in ASTM F 1667. The nails must have the following minimum fastener dimensions and bending yield strengths (F_{yb}):

FASTENER	SHANK DIAMETER (inches)	FASTENER LENGTH (inches)	F_{yb} (psi)
8d×1$^1/_2$	0.131	1$^1/_2$	100,000
8d	0.131	2$^1/_2$	100,000
10d×1$^1/_2$	0.148	1$^1/_2$	90,000
10d	0.148	3	90,000

For **SI:** 1 inch = 25.4 mm, 1 psi = 6.895 kPa.

Nails used in contact with preservative treated or fire retardant treated lumber must comply with IBC Section 2304.9.5 or IRC Section R319.3, as applicable. For use with treated lumber, the lumber treater or this report holder (Simpson Strong-Tie Company), or both, should be contacted for recommendations on the appropriate coating or material to specify for the fasteners as well as the connection capacities of fasteners used with the specific proprietary preservative treated or fire retardant treated lumber.

4.0 DESIGN AND INSTALLATION

4.1 Design:

The tabulated allowable loads shown in the product tables of this report are based on Allowable Stress Design (ASD) and include the load duration factor, C_D, corresponding with the applicable loads in accordance with the National Design Specification for Wood Construction and its supplement (NDS).

Tabulated allowable loads apply to products connected to wood used under dry conditions and where sustained temperatures are 100ºF (37.8ºC) or less. When products are installed to wood having a moisture content greater than 19 percent (16 percent for engineered wood products), or where wet service is expected, the allowable loads must be adjusted by the wet service factor, C_M, specified in the NDS for dowel-type fasteners. When connectors are installed in wood that will experience sustained exposure to temperatures exceeding 100ºF (37.8ºC), the allowable loads in this report must be adjusted by the applicable temperature factor, C_t, specified in the NDS. Connected wood members must be analyzed for load-carrying capacity at the connection in accordance with the NDS.

4.2 Installation:

Installation of the connectors must be in accordance with this evaluation report and the manufacturer's published installation instructions. Bolts and nails must be installed in accordance with the applicable provisions in the NDS. In the event of a conflict between this report and the manufacturer's published installation instructions, this report governs.

5.0 CONDITIONS OF USE

The Simpson Strong-Tie connectors described in this report comply with, or are suitable alternatives to what is specified in, those codes listed in Section 1.0 of this report, subject to the following conditions:

5.1 The connectors must be manufactured, identified and installed in accordance with this report and the manufacturer's published installation instructions. A copy of the instructions must be available at the jobsite at all times during installation.

5.2 Calculations showing compliance with this report must be submitted to the code official. The calculations must be prepared by a registered design professional where required by the statues of the jurisdiction in which the project is to be constructed

5.3 Adjustment factors noted in Section 4.1 and the applicable codes must be considered, where applicable.

5.4 Connected wood members and fasteners must comply, respectively, with Sections 3.2.2 and 3.2.3 of this report.

5.5 Use of connectors with preservative treated or fire retardant treated lumber must be in accordance with Section 3.2.1 of this report. Use of fasteners with preservative treated or fire retardant treated lumber must be in accordance with Section 3.2.3 of this report.

6.0 EVIDENCE SUBMITTED

Data in accordance with the ICC-ES Acceptance Criteria for Joist Hangers and Similar Devices (AC13), dated October 2006 (corrected March 2007).

7.0 IDENTIFICATION

The products described in this report are identified with a die-stamped label indicating the name of the manufacturer (Simpson Strong-Tie), the model number, and the number of an index evaluation report (ESR-2523) that is used as an identifier for the products recognized in this report.

8.0 OTHER CODES

8.1 Evaluation Scope:

In addition to the codes referenced in Section 1.0, the products in this report were evaluated for compliance with the requirements of the following codes:

- 2003 *International Building Code*® (2003 IBC)
- 2003 *International Residential Code*® (2003 IRC)
- 2000 *International Building Code*® (2000 IBC)
- 2000 *International Residential Code*® (2000 IRC)
- 1997 *Uniform Building Code*™ (UBC)

The products described in this report comply with, or are suitable alternatives to what is specified in, the codes listed above, subject to the provisions of Sections 8.2 through 8.7.

8.2 Uses:

8.2.1 2003 IBC, 2003 IRC, 2000 IBC, and 2000 IRC: The same as Section 2.0 of this report.

8.2.2 1997 UBC: Replace the information in Section 2.0 with the following: Simpson Strong-Tie connectors for metal plate connected wood truss construction are used as wood framing connectors in accordance with Section 2318.4 of the UBC.

8.3 Description:

8.3.1 2003 IBC and 2003 IRC: See Section 3.0 of this report.

8.3.2 2000 IBC and 2000 IRC: See Section 3.0 of this report, except modify Section 3.2.3 of this report to reference IRC Section R323.3.

8.3.3 1997 UBC: See Section 3.0 of this report, except modify the first sentence in the last paragraph of Section 3.2.3 as follows: Fasteners used in contact with preservative treated or fire retardant treated lumber must, as a minimum, comply with UBC Section 2304.3.

8.4 Design and Installation:

2003 IBC, 2003 IRC, 2000 IBC, 2000 IRC, 1997 UBC: The same as Section 4.0 of this report.

8.5 Conditions of Use:

8.5.1 2003 IBC, 2003 IRC 2000 IBC, and 2000 IRC: The Simpson Strong-Tie products described in this report comply with, or are suitable alternatives to what is specified in, those codes listed in Section 8.0, subject to the same conditions of use indicated in Section 5.0 of this report.

8.5.2 UBC: The Simpson Strong-Tie products described in this report comply with, or are suitable alternatives to what is specified in, the UBC, subject to the same conditions of use indicated in Section 5.0 of this report, except the last sentence of Section 5.5 is replaced with the following: Fasteners used in contact with preservative treated or fire retardant treated lumber must, as a minimum, comply with UBC Section 2304.3.

8.6 Evidence Submitted:

2003 IBC, 2003 IRC 2000 IBC, 2000 IRC, 1997 UBC: See Section 6.0 of this report.

8.7 Identification:

2003 IBC, 2003 IRC 2000 IBC, 2000 IRC, 1997 UBC: See Section 7.0 of this report.

TABLE 1—GBC GABLE BRACE CONNECTOR

MODEL NO.	FASTENERS PER CONNECTOR[1] (Quantity-Type)		ALLOWABLE LOADS (F_2) PERPENDICULAR TO WALL TOP PLATE[2,3] (lbs) C_D = 1.33 C_D = 1.6			
			Allowable Tension (F_2 Away) for Gable Brace Installed at a Slope between:		Allowable Compression (F_2 Toward) for Gable Brace Installed at a Slope between:	
	Brace Member[4]	Top Plates	40°– 45°	46° – 60°	40°– 45°	46° – 60°
GBC	5 – 8dx1$^1/_2$	7 – 8d	425[(6)]	325	635[(5)]	570

For **SI:** 1 inch = 25.4 mm, 1 lbs = 4.45 N.

[1]Nails used with the GBC connector and LVL products (see footnote 6) must also comply with the minimum edge and spacing limitations specified in the evaluation report for the specific LVL product.
[2]Allowable loads have been increased for wind or earthquake loading with no further increase allowed. Reduce loads when other load durations govern.
[3]Allowable loads shown are for one pair of connectors. The GBC connectors must be installed in pairs, as shown in Figure 1.
[4]Minimum brace member size must be nominal 2x4 lumber having a minimum specific gravity of 0.50 or LVL having an equivalent minimum specific gravity of 0.50 (see footnote 5).
[5]Brace members consisting of minimum 1$^3/_4$"x3 $^1/_2$" LVL, the allowable loads at 40 to 45 degrees are 635 lbs compression (F_2 Toward) and 515 lbs tension (F_2 Away).

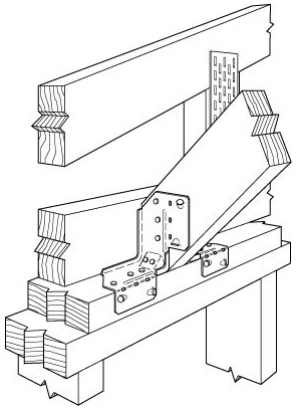

GBC Typical Installation

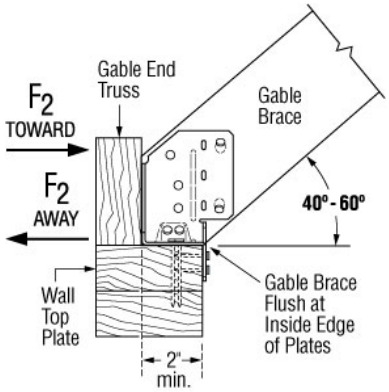

GBC Installation Detail and Allowable Load Directions F_2 (toward) and F_2 (away)

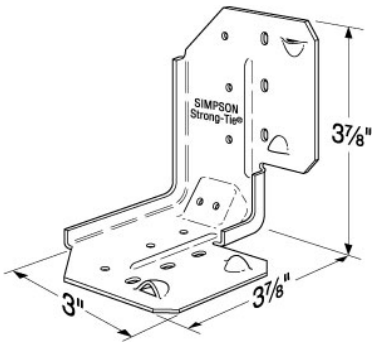

GBC Gable Brace Connector Dimensions

FIGURE 1—GBC GABLE BRACE CONNECTOR

TABLE 2—TSB TRUSS SPACER BRACER[1,2]

MODEL NO.	FASTENERS (Total Quantity–Type)	LENGTH (inches)	ALLOWABLE LOADS[3] (lbs) C_D = 1.33 C_D = 1.6	
			Compression	Tension
TSB2-24	4–10dx1 $^1/_2$	25 $^1/_2$	540	365

For **SI:** 1 inch = 25.4 mm, 1 lbs = 4.45 N.

[1]The TSB connectors are used as permanent truss bracing that provides lateral support to trusses when installed at right angles to the plane of the truss member. The design of the TSB connectors must comply with Section 2303.4.1.5 of the 2006 IBC, or Section 2304 of the 2003 and 200 IBC, or Section 2321 of the UBC, as applicable.
[2]TSB connectors must be free of deformations such as dents, bends, or other defects that will adversely affect the performance of the connector in compression.
[3]Allowable loads have been increased for wind or earthquake loading with no further increase allowed. Reduce loads when other load durations govern.

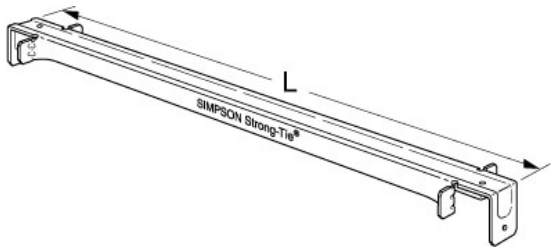

TSB Truss Spacer Bracer

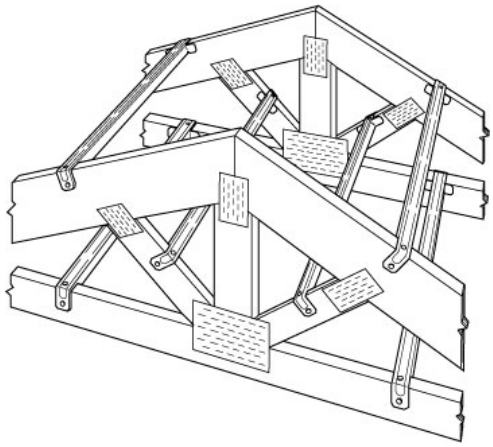

TSB Installation on Nominally 2-inch-wide Wood Trusses

FIGURE 2—TSB TRUSS SPACER BRACER

TABLE 3—VTC VALLEY TRUSS CLIP

MODEL NO.	FASTENERS (Quantity – Type)		ALLOWABLE LOADS[1,2] (lbs)			
	Common Truss[3]	Valley Truss[4,5]	Uplift[6]	Download		
			C_D = 1.33 C_D = 1.6	C_D = 1.0	C_D = 1.15	C_D = 1.25
VTC2	4 – 10d	5 – 10dx1$^1/_2$	330	480	550	600

For **SI:** 1 inch = 25.4 mm, 1 lbs = 4.45 N.

[1]Tabulated allowable loads must be selected based on duration of load as permitted by the applicable building code.
[2]Tabulated allowable loads are applicable when the maximum roof sheathing thickness is $^7/_{16}$ inch.
[3]Allowable pitch range of roof sheathing and common truss chord is 5:12 (23°) to 8:12 (34°).
[4]Maximum allowable spacing parallel to valley truss chord is 48 inches on center (o.c.).
[5]Two 10dx1$^1/_2$ nails are installed in one vertical stirrup and three 10dx1$^1/_2$ nails in the other vertical stirrup to the valley truss bottom chord.
[6]The uplift load capacities have been increased for wind or earthquake loading with no further increase is allowed. Reduce loads when other load durations govern.

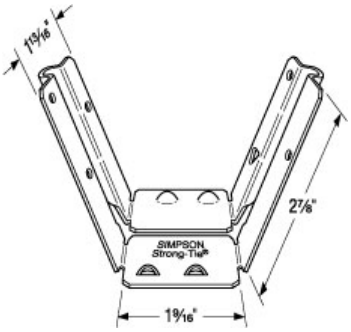

VTC Valley Truss Clip

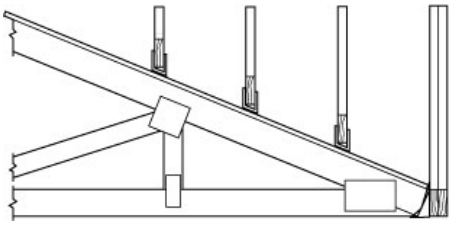

Typical VTC Installation Side View

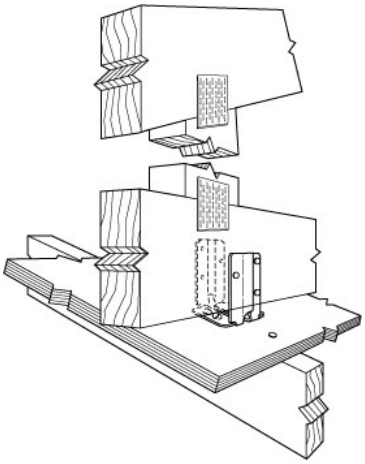

Typical VTC Installation

FIGURE 3—VTC VALLEY TRUSS CLIP

TABLE 4—TC TRUSS CLIP

MODEL NO.	FASTENERS (Quantity – Type)		ALLOWABLE LOADS[1] (lbs) C_D = 1.33 C_D = 1.6	
	Truss	Plate	Uplift	Lateral[2,3]
TC26	5 – 10d	6 – 10d	625	265
TC28				

For **SI:** 1 inch = 25.4 mm, 1 lbs = 4.45 N.

[1]The load capacities have been increased for wind or earthquake loading with no further increase is allowed. Reduce loads when other load durations govern.
[2]Allowable lateral loads are for loads parallel to the wall top plate.
[3]When fastened to a wood plate on top of masonry wall construction, as shown in Figure 4, anchorage other than the TCA clips must be provided to laterally support the masonry wall to the roof diaphragm in accordance with Section 1604.8 of the 2006, 2003, and the 2000 IBC; or Section 1605.2.3 of the UBC, depending on the code used to regulate construction.

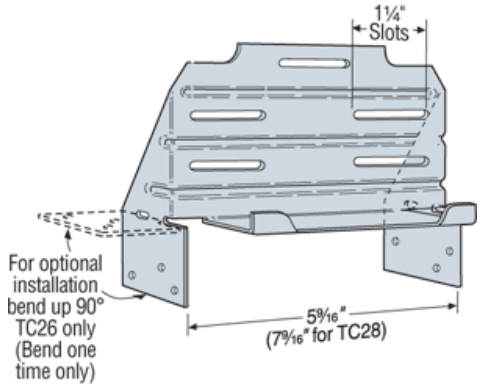

TC26 Truss Clip

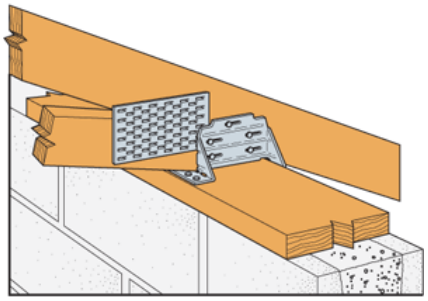

Optional TC26 Installation: Attached to a Wood Plate on top of Grouted Masonry Construction

FIGURE 4—TC TRUSS CLIP

TABLE 5—TBE TRUSS BEARING ENHANCER

MODEL NO.	TRUSS PLYS[1]	FASTENERS (Quantity – Type)		ALLOWABLE LOADS[2,3] (lbs) C_D = 1.33 C_D = 1.6		
		Rafter	Plate	Uplift	Lateral	
					Parallel-to-Plate	Perpendicular-to-Plate
TBE4	1	10 – 10dx1$^1/_2$	10 – 10dx1$^1/_2$	850	400	1,000
	2	10 – 10d	10 – 10d			
	3	10 – 10d	10 – 10d			
	4	10 – 10d	10 – 10d			
TBE6	1	10 – 10dx1$^1/_2$	10 – 10dx1$^1/_2$	935	300	1,000
	2	10 – 10d	10 – 10d			
	3	10 – 10d	10 – 10d			
	4	10 – 10d	10 – 10d			

For **SI:** 1 inch = 25.4 mm, 1 lbs = 4.45 N.

[1]Truss plies are nominally 2 inches wide.
[2]The load capacities have been increased for wind or earthquake loading with no further increase is allowed. Reduce loads when other load durations govern.
[3]Although the required fastener quantities and tabulated allowable loads are for a single TBE connector, the connectors must be installed in pairs as shown in Figure 5.

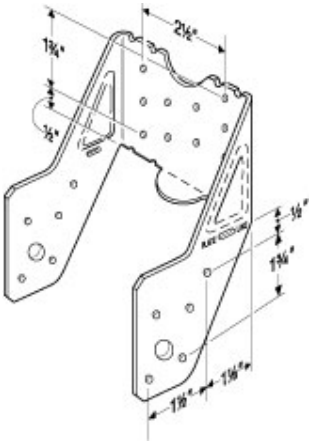

TBE4 (TBE6 Similar)

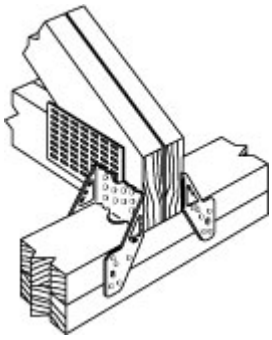

TBE Typical Installation on 2-ply Truss

FIGURE 5—TBE TRUSS BEARING ENHANCER