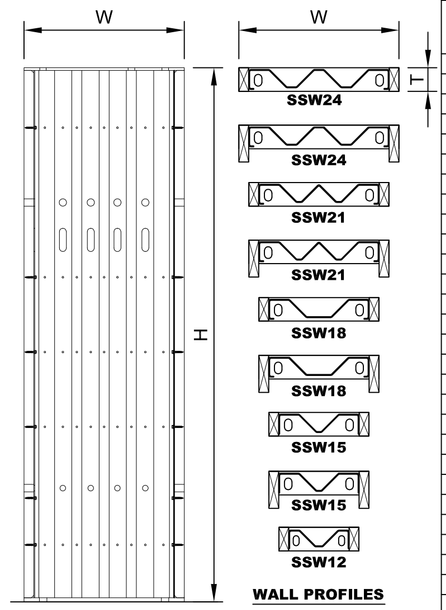

WALL PROFILES

STEEL STRONG-WALL MODELS

STD. WALL MODEL NO.	-STK WALL MODEL NO.	H (in)	T (in)	HOLDOWN ANCHOR BOLTS[1]	QTY. OF TOP OF WALL SCREWS[1]
SSW12x7	- -	80	3 1/2	(2) 3/4"	4
SSW15x7	- -	80	3 1/2	(2) 1"	6
SSW18x7	- -	80	3 1/2	(2) 1"	9
SSW21x7	- -	80	3 1/2	(2) 1"	12
SSW24x7	- -	80	3 1/2	(2) 1"	14
SSW12x7.4	- -	85 1/2	3 1/2	(2) 3/4"	4
SSW15x7.4	- -	85 1/2	3 1/2	(2) 1"	6
SSW18x7.4	- -	85 1/2	3 1/2	(2) 1"	9
SSW21x7.4	- -	85 1/2	3 1/2	(2) 1"	12
SSW24x7.4	- -	85 1/2	3 1/2	(2) 1"	14
SSW12x8	- -	93 1/4	3 1/2	(2) 3/4"	4
SSW15x8	SSW15x8-STK	93 1/4	3 1/2	(2) 1"	6
SSW18x8	SSW18x8-STK	93 1/4	3 1/2	(2) 1"	9
SSW21x8	SSW21x8-STK	93 1/4	3 1/2	(2) 1"	12
SSW24x8	SSW24x8-STK	93 1/4	3 1/2	(2) 1"	14
SSW12x9	- -	105 1/4	3 1/2	(2) 3/4"	4
SSW15x9	SSW15x9-STK	105 1/4	3 1/2	(2) 1"	6
SSW18x9	SSW18x9-STK	105 1/4	3 1/2	(2) 1"	9
SSW21x9	SSW21x9-STK	105 1/4	3 1/2	(2) 1"	12
SSW24x9	SSW24x9-STK	105 1/4	3 1/2	(2) 1"	14
SSW12x10	- -	117 1/4	3 1/2	(2) 3/4"	4
SSW15x10	SSW15x10-STK	117 1/4	3 1/2	(2) 1"	6
SSW18x10	SSW18x10-STK	117 1/4	3 1/2	(2) 1"	9
SSW21x10	SSW21x10-STK	117 1/4	3 1/2	(2) 1"	12
SSW24x10	SSW24x10-STK	117 1/4	3 1/2	(2) 1"	14
SSW15x11	SSW15x11-STK	129 1/4	5 1/2	(2) 1"	6
SSW18x11	SSW18x11-STK	129 1/4	5 1/2	(2) 1"	9
SSW21x11	SSW21x11-STK	129 1/4	5 1/2	(2) 1"	12
SSW24x11	SSW24x11-STK	129 1/4	5 1/2	(2) 1"	14
SSW15x12	SSW15x12-STK	141 1/4	5 1/2	(2) 1"	6
SSW18x12	SSW18x12-STK	141 1/4	5 1/2	(2) 1"	9
SSW21x12	SSW21x12-STK	141 1/4	5 1/2	(2) 1"	12
SSW24x12	SSW24x12-STK	141 1/4	5 1/2	(2) 1"	14
SSW18x13	SSW18x13-STK	153 1/4	5 1/2	(2) 1"	9
SSW21x13	SSW21x13-STK	153 1/4	5 1/2	(2) 1"	12
SSW24x13	SSW24x13-STK	153 1/4	5 1/2	(2) 1"	14

TABLE NOTES:
1. SDS¼" x 3½" SCREWS PROVIDED WITH WALL.
2. SEE SHEET SSW1 FOR ANCHORAGE SOLUTIONS.

STEEL STRONG-WALL MODELS — 1

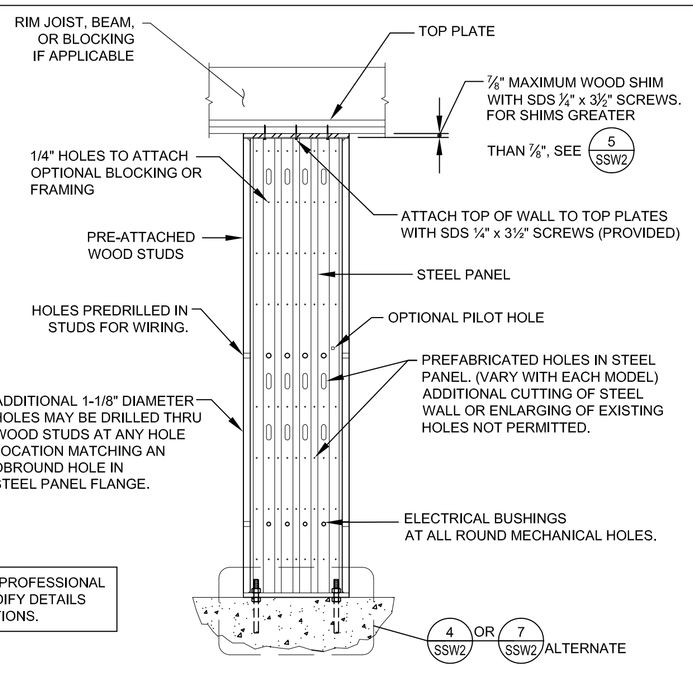

REGISTERED DESIGN PROFESSIONAL IS PERMITTED TO MODIFY DETAILS FOR SPECIFIC CONDITIONS.

SINGLE-STORY SSW ON CONCRETE — 2

GARAGE HEADER ROUGH OPENING HEIGHT

MODEL No.	H CURB	ROUGH OPENING HEIGHT
SSW12x7 SSW15x7 SSW18x7	5½"	7' - 1½"
SSW21x7 SSW24x7	6"	7' - 2"
SSW12x8 SSW15x8	5½"	8' - 2½"
SSW18x8 SSW21x8 SSW24x8	6"	8' - 3¼"

1. THE HEIGHT OF THE GARAGE CURB ABOVE THE GARAGE SLAB IS CRITICAL FOR THE ROUGH HEADER OPENING AT GARAGE RETURN WALLS.
2. SHIMS ARE NOT PROVIDED WITH STEEL STRONG-WALL.
3. FURRING ON UNDERSIDE OF GARAGE HEADER MAY BE NECESSARY FOR LESSER ROUGH OPENING HEIGHTS.

REGISTERED DESIGN PROFESSIONAL IS PERMITTED TO MODIFY DETAILS FOR SPECIFIC CONDITIONS.

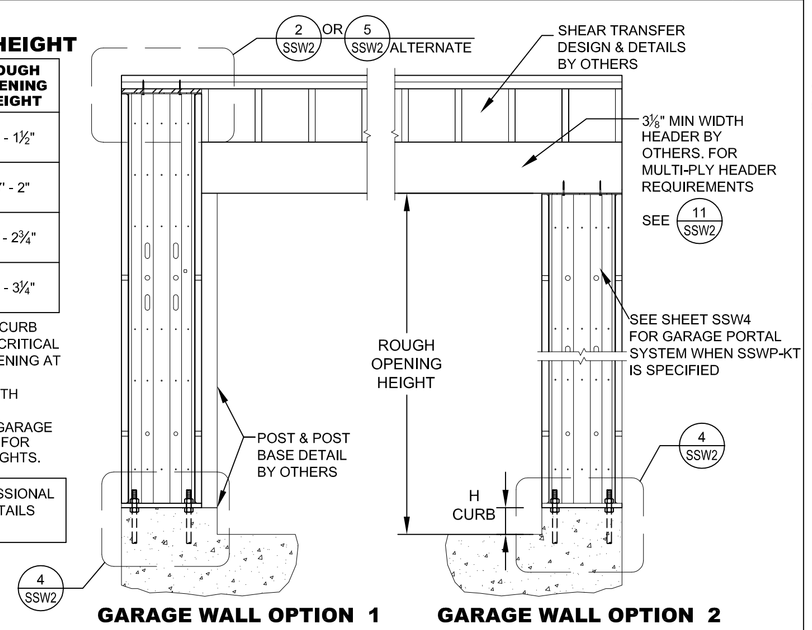

GARAGE WALL OPTION 1 — GARAGE WALL OPTION 2 — GARAGE WALL OPTION 2 FOR GARAGE WALL OPTION 2

NOTE:
7-FT. HIGH STEEL STRONG-WALL MODELS ARE 80", 2" TALLER THAN 7-FT. HIGH WOOD STRONG-WALL SHEARWALLS

REGISTERED DESIGN PROFESSIONAL SHALL DESIGN FOR:
1. SHEAR TRANSFER
2. OUT OF PLANE LOADING EFFECT
3. INCREASED OVERTURNING AND DRIFT DUE TO ADDITIONAL HEIGHT.

ALTERNATE GARAGE WALL OPTIONS — 3

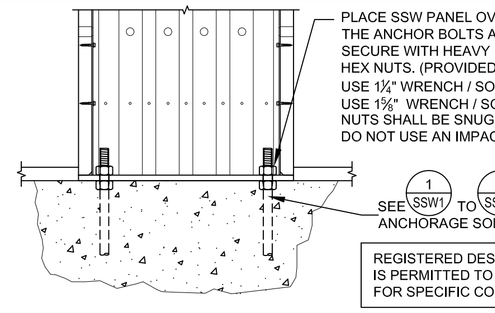

REGISTERED DESIGN PROFESSIONAL IS PERMITTED TO MODIFY DETAILS FOR SPECIFIC CONDITIONS.

STRONG-WALL ON CONCRETE — 4

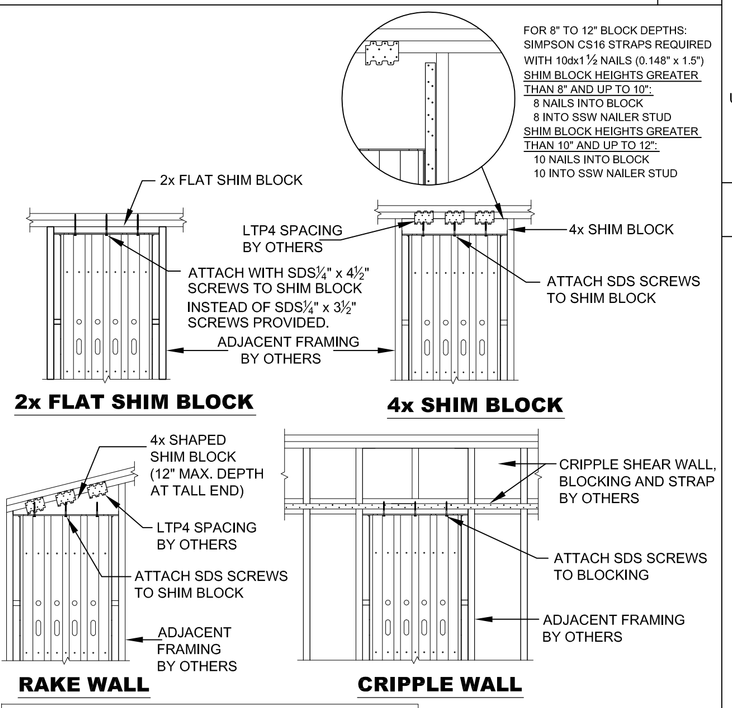

REGISTERED DESIGN PROFESSIONAL SHALL DESIGN FOR:
1. SHEAR TRANSFER
2. OUT OF PLANE LOADING EFFECT
3. INCREASED OVERTURNING AND DRIFT DUE TO ADDITIONAL HEIGHT.

REGISTERED DESIGN PROFESSIONAL IS PERMITTED TO MODIFY DETAILS FOR SPECIFIC CONDITIONS.

TOP OF WALL HEIGHT ADJUSTMENTS — 5

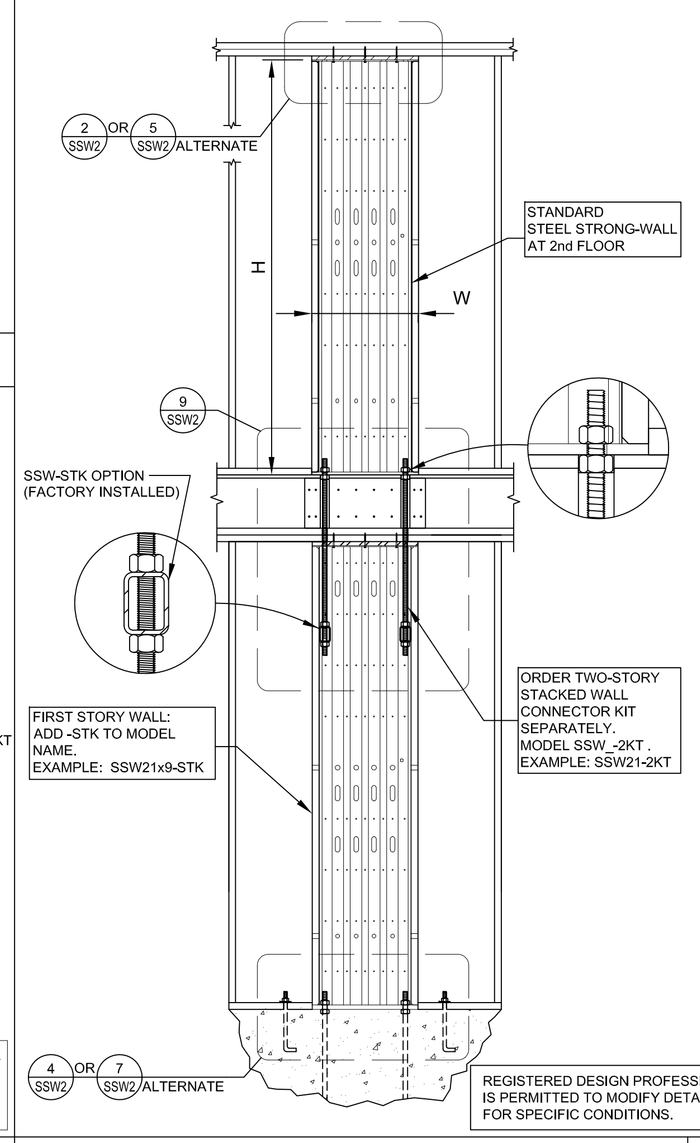

REGISTERED DESIGN PROFESSIONAL IS PERMITTED TO MODIFY DETAILS FOR SPECIFIC CONDITIONS.

TWO-STORY STACKED — 6

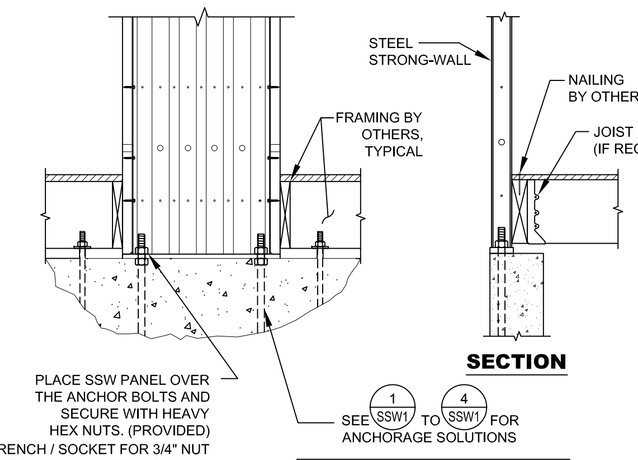

REGISTERED DESIGN PROFESSIONAL IS PERMITTED TO MODIFY DETAILS FOR SPECIFIC CONDITIONS.

ALTERNATE 1ST FLOOR WOOD FRAMING — 7

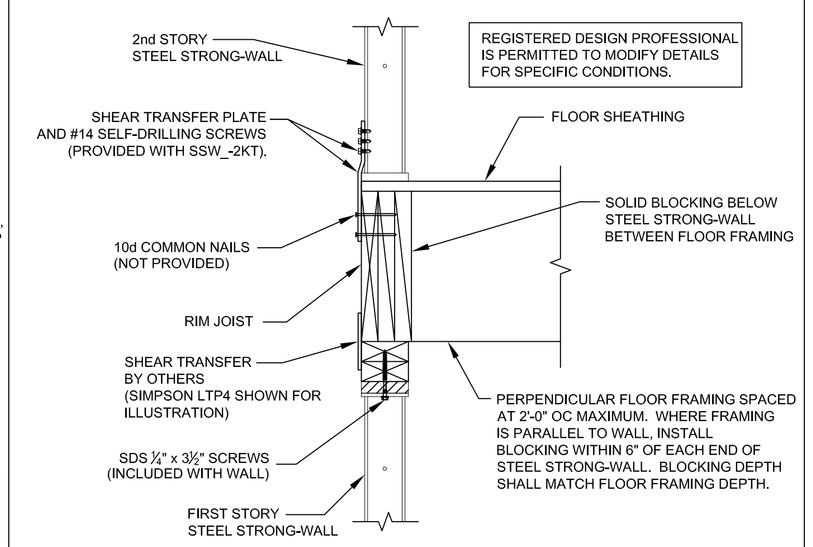

REGISTERED DESIGN PROFESSIONAL IS PERMITTED TO MODIFY DETAILS FOR SPECIFIC CONDITIONS.

TWO-STORY STACKED FLOOR SECTION — 8

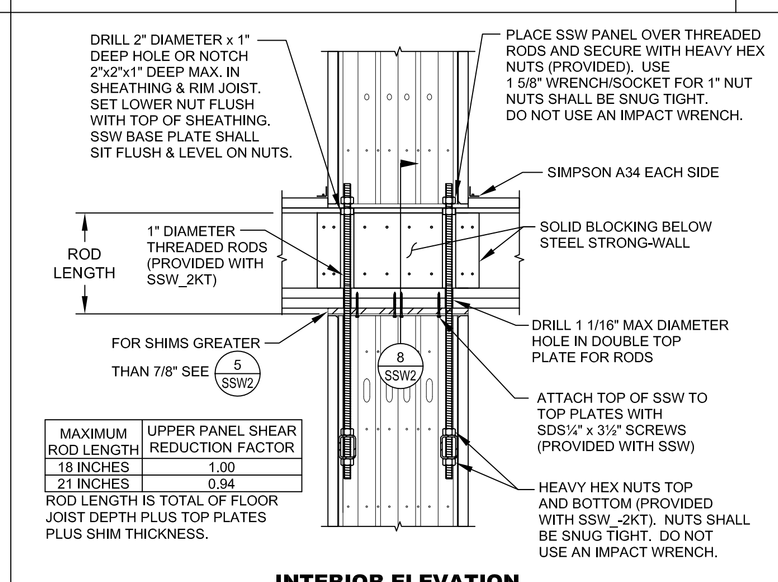

MAXIMUM ROD LENGTH	UPPER PANEL SHEAR REDUCTION FACTOR
18 INCHES	1.00
21 INCHES	0.94

ROD LENGTH IS TOTAL OF FLOOR JOIST DEPTH PLUS TOP PLATES PLUS SHIM THICKNESS.

INTERIOR ELEVATION

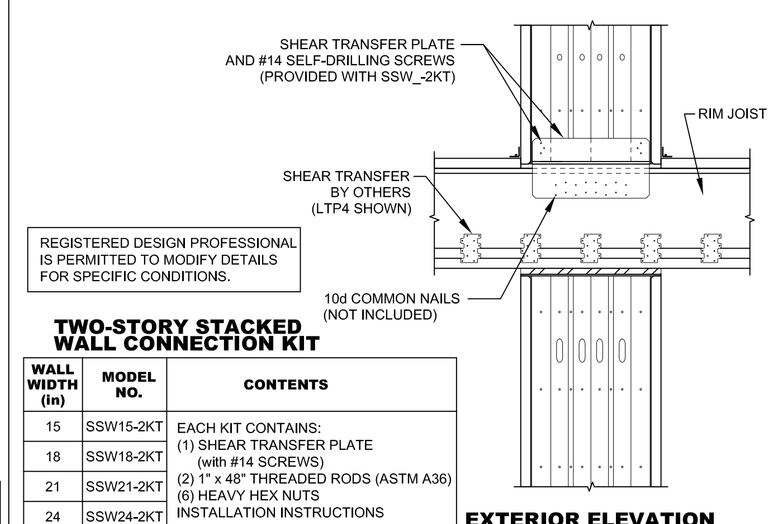

REGISTERED DESIGN PROFESSIONAL IS PERMITTED TO MODIFY DETAILS FOR SPECIFIC CONDITIONS.

TWO-STORY STACKED WALL CONNECTION KIT

WALL WIDTH (in)	MODEL NO.	CONTENTS
15	SSW15-2KT	EACH KIT CONTAINS: (1) SHEAR TRANSFER PLATE (with #14 SCREWS) (2) 1" x 48" THREADED RODS (ASTM A36) (6) HEAVY HEX NUTS INSTALLATION INSTRUCTIONS
18	SSW18-2KT	
21	SSW21-2KT	
24	SSW24-2KT	

EXTERIOR ELEVATION

TWO-STORY STACKED FLOOR FRAMING — 9

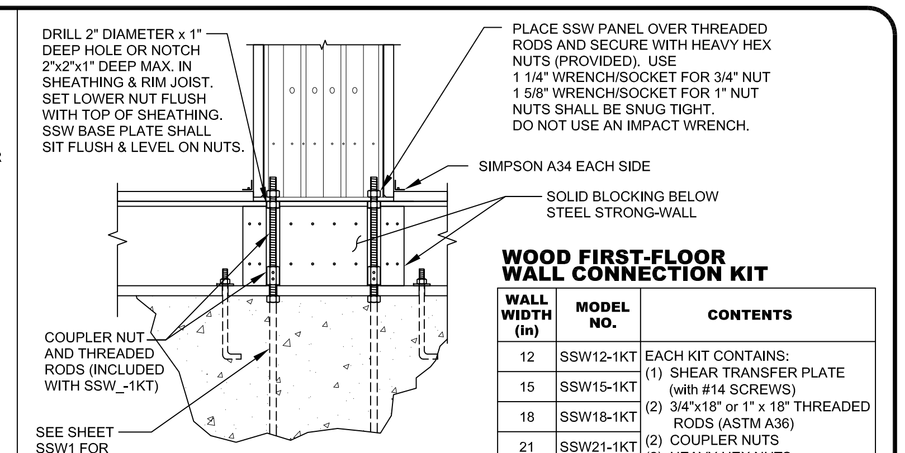

WOOD FIRST-FLOOR WALL CONNECTION KIT

WALL WIDTH (in)	MODEL NO.	CONTENTS
12	SSW12-1KT	EACH KIT CONTAINS: (1) SHEAR TRANSFER PLATE (with #14 SCREWS) (2) 3/4"x18" or 1" x 18" THREADED RODS (ASTM A36) (2) COUPLER NUTS (2) HEAVY HEX NUTS INSTALLATION INSTRUCTIONS
15	SSW15-1KT	
18	SSW18-1KT	
21	SSW21-1KT	
24	SSW24-1KT	

ORDER FIRST FLOOR CONNECTOR KIT SEPARATELY. MODEL SSW_-1KT . EXAMPLE: SSW21-1KT

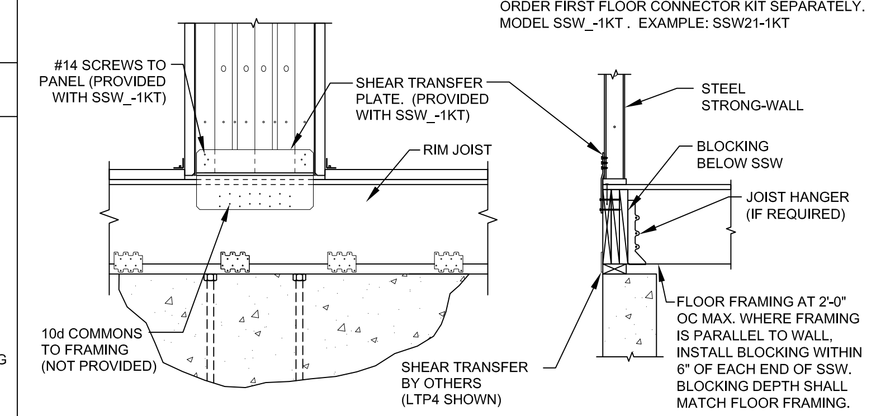

EXTERIOR ELEVATION — SECTION

FIRST FLOOR AT WOOD FRAMING NOTES:
1. USE WOOD FIRST-FLOOR ALLOWABLE LOAD TABLES FROM THE STRONG-WALL CATALOG FOR THIS INSTALLATION.
2. USE ALTERNATE DETAIL 7/SSW2 TO ACHIEVE MAXIMUM ON-CONCRETE ALLOWABLE LOADS.
3. FOR TWO-STORY STACKED STEEL STRONG-WALLS WITH WOOD FIRST FLOOR, USE ALTERNATE DETAIL 7/SSW2.
4. REGISTERED DESIGN PROFESSIONAL SHALL DESIGN FOR SHEAR TRANSFER FROM RIM JOIST TO SILL PLATE AND SILL PLATE TO FOUNDATION.

REGISTERED DESIGN PROFESSIONAL IS PERMITTED TO MODIFY DETAILS FOR SPECIFIC CONDITIONS.

FIRST FLOOR AT WOOD FRAMING — 10

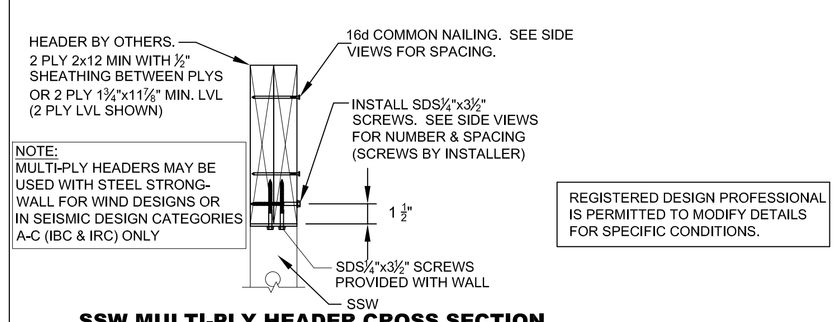

NOTE:
MULTI-PLY HEADERS MAY BE USED WITH STEEL STRONG-WALL FOR WIND DESIGNS OR IN SEISMIC DESIGN CATEGORIES A-C (IBC & IRC) ONLY

REGISTERED DESIGN PROFESSIONAL IS PERMITTED TO MODIFY DETAILS FOR SPECIFIC CONDITIONS.

SSW MULTI-PLY HEADER CROSS SECTION

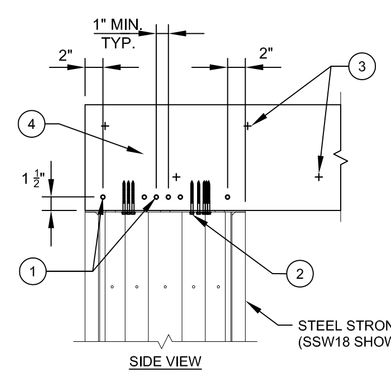

1. INSTALL SDS 1/4"x3 1/2" SCREWS HORIZONTALLY THROUGH LVL OR 2 x LUMBER HEADER PLYS. 4 SCREWS TOTAL FOR SSW12, 6 SCREWS TOTAL FOR SSW15, SSW18, SSW21 AND SSW24.
2. SDS 1/4"x3 1/2" SCREWS PROVIDED WITH WALL
3. FASTEN PLYS TOGETHER WITH 16d COMMON NAILS AT 16" O.C. ALONG EACH EDGE OF BEAM.
4. 15/32" SHEATHING BETWEEN 2x HEADER PLYS SHALL MATCH HEADER DEPTH AND EXTEND FULL WIDTH OF SSW, MINIMUM.

SSW WITH MULTI-PLY HEADER

MULTI-PLY HEADERS — 11

1. STEEL STRONG-WALL SHEARWALL IS MANUFACTURED AND TRADEMARKED BY "SIMPSON STRONG-TIE COMPANY, INC." HOME OFFICE: 5956 W. LAS POSITAS BLVD. , PLEASANTON, CA 94588 TEL: (800) 999-5099, FAX: (925) 847-1597. "SIMPSON STRONG-TIE COMPANY, INC." IS AN ISO 9001 REGISTERED COMPANY.
2. USE OF THIS PRODUCT IS SUBJECT TO THE APPROVAL OF THE LOCAL BUILDING DEPARTMENT.
3. THIS PRODUCT IS PART OF THE OVERALL LATERAL FORCE RESISTING SYSTEM OF THE STRUCTURE. DESIGN OF THE BUILDING'S LATERAL FORCE RESISTING SYSTEM, INCLUDING THE LOAD PATH TO TRANSFER LATERAL FORCES FROM THE STRUCTURE TO THE GROUND, IS THE RESPONSIBILITY OF THE SPECIFIER.
4. ENGINEER OF RECORD IS PERMITTED TO MODIFY DETAILS FOR SPECIFIC CONDITIONS.
5. THE CONTRACTOR SHALL VERIFY ALL DIMENSIONS, CONDITIONS, ELEVATIONS, ETC. PRIOR TO INSTALLATION OF ANY COMPONENTS FOR THE STEEL STRONG-WALL SYSTEM. IF ANY DISCREPANCIES ARE FOUND, THEY SHALL BE BROUGHT TO THE ATTENTION OF THE SPECIFIER FOR CLARIFICATION PRIOR TO CONSTRUCTION.
6. INSTALLATION OF PRODUCT SHALL BE DONE IN CONFORMANCE TO THESE DRAWINGS. THE PERFORMANCE OF MODIFIED PRODUCTS OR ALTERED INSTALLATION PROCEDURES ARE THE SOLE RESPONSIBILITY OF THE SPECIFIER.
7. SIMPSON STRONG-TIE COMPANY, INC. RESERVES THE RIGHT TO CHANGE SPECIFICATIONS, DESIGNS, AND MODELS WITHOUT NOTICE OR LIABILITY FOR SUCH CHANGES.
8. ALL HARDWARE CALLED OUT IS SIMPSON STRONG-TIE.

NOTES — 12

NO.	DATE	REVISIONS
1	9/21/2009	2006 IBC REVISIONS

SIMPSON STRONG-TIE COMPANY, INC.
HOME OFFICE: 5956 W. LAS POSITAS BLVD. PLEASANTON, CA 94588 TEL: (800) 999-5099

SIMPSON Strong-Tie THERE IS NO EQUAL

STEEL STRONG-WALL
FRAMING DETAILS
ENGINEERED DESIGNS

SIMPSON Strong-Tie THERE IS NO EQUAL

NAME
DATE 9-21-2009
SCALE N.T.S.
CHECKED
SHEET **SSW2**
OF SHEETS
JOB NO.